EC 45 flat brushless, 50 Watt, with integrated electronics

1-Q-speed controller

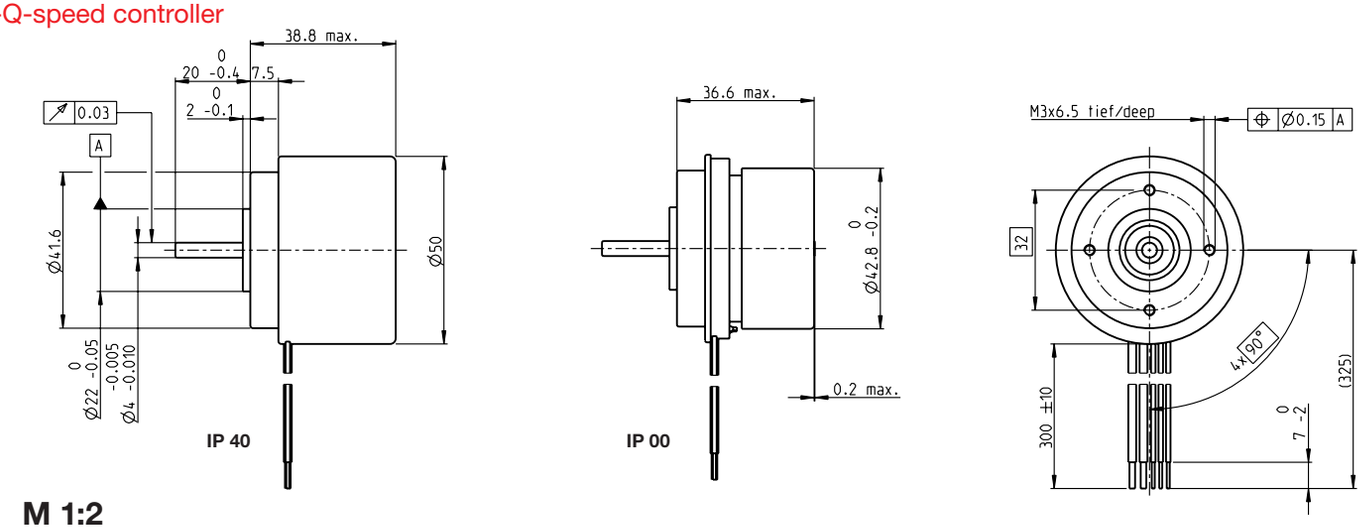

M 1:2

Stock program
Standard program
Special program (on request)

Part Numbers

	2 wire version		5 wire version: Enable		5 wire version: Direction	
IP 40 (with cover)	353526		350910		370427	
IP 00 (without cover)		353524		352887		370426

Motor Data (provisional)

	Values at nominal voltage							
1	Nominal voltage	V	24	24	24	24	24	24
2	No load speed	rpm	3000	3000	4500	4500	4500	4500
3	No load current	mA	114	114	192	192	192	192
4	Nominal speed	rpm	3000	3000	4500	4500	4500	4500
5	Nominal torque (max. continuous torque)	mNm	89.9	130	82.8	131	82.8	131
6	Nominal current (max. continuous current)	A	1.61	2.41	2.15	3.45	2.15	3.45
33	Max. torque	mNm	150	150	149	149	149	149
34	Max. current	A	2.83	2.83	3.86	3.86	3.86	3.86
9	Max. efficiency	%	74	74	76	76	76	76
	Characteristics							
35	Type of control		Speed	Speed	Speed	Speed	Speed	Speed
36	Supply voltage $+V_{CC}$	V	10…28	10…28	10…28	10…28	10…28	10…28
37	Speed set value input	V	$= V_{CC}$	$= V_{CC}$	0.33…10.8	0.33…10.8	0.33…10.8	0.33…10.8
38	Scale speed set value input	rpm/V	125	125	600	600	600	600
39	Speed range	rpm	1250…3500	1250…3500	200…6480	200…6480	200…6480	200…6480
40	Max. acceleration	rpm/s	3000	3000	6000	6000	6000	6000

Specifications

Thermal data

17	Thermal resistance housing-ambient	5.1 (2.5) K/W
18	Thermal resistance winding-housing	6.7 (3.3) K/W
19	Thermal time constant winding	45.1 (22.1) s
20	Thermal time constant motor	256 (124) s
21	Ambient temperature	-40…+85°C
22	Max. winding temperature	+125°C
41	Max. temperature of electronics	+105°C

Mechanical data (preloaded ball bearings)

16	Rotor inertia	181 gcm²
24	Axial play at axial load < 7.0 N	0 mm
	> 7.0 N	0.14 mm
25	Radial play	preloaded
26	Max. axial load (dynamic)	6.8 N
27	Max. force for press fits (static)	95 N
	(static, shaft supported)	1000 N
28	Max. radial load, 5 mm from flange	63 N

Other specifications

31	Weight of motor	260 g
32	Direction of rotation	Clockwise (CW)

Values listed in the table are nominal.

Protective functions
Overload protection, blockage protection, inverse-polarity protection, thermal overload protection, low/high voltage cut-off

Connection 2 wire version (Cable AWG 18)

red	$+V_{CC}$ 10…28 VDC
black	GND

Connection 5 wire version (Cable AWG 18/24)

red	$+V_{CC}$ 10…28 VDC
black	GND
white	Speed set value input
green	Monitor n (6 pulses per revolution)
grey	Disable (Type Enable) or sense of direction (Type Direction)

Operating Range

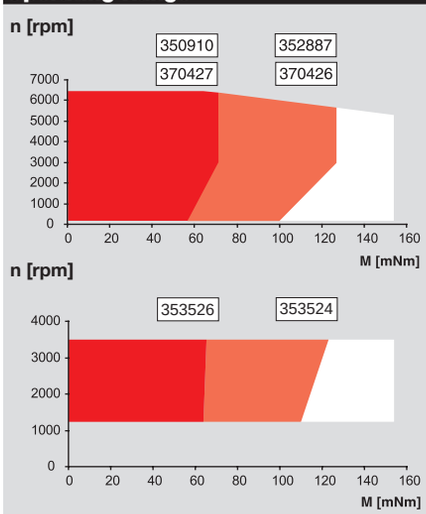

Comments

Continuous operation
The drive can be operated with a speed controller and, taking account of the given thermal resistance (fig. 17 and 18) at an ambient temperature of 25°C, does not exceed the maximum permissible operating temperatures.

Overload range
The drive reaches these operating points. Speed may vary from the set value. The overload protection shuts down the drive in the event of sustained overload.

maxon Modular System

Overview on page 20–27

Planetary Gearhead
Ø42 mm
3 - 15 Nm
Page 351
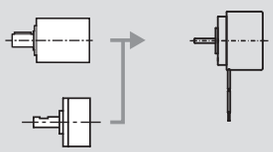
Spur Gearhead
Ø45 mm
0.5 - 2.0 Nm
Page 353